P100001548 REF_12KW_HFHD_PSU final assembly instructions

- P2: chassis preparation
- P3: PW100001548 LLC assembly
- P4: PW200001549 PFC assembly
- P5: installation of e-modules
- P6: PW400001549 assembly
- P7: installation of busbars & heatsinks
- P8: FA100001548 installation
- P9: module installation in chassis
- P10: module installation part2
- P11: enclosure finish

					Datum	Name
				Gezeich	19.11.2025	Wernegger
				Kontroll		
				Norm		
Status	Änderungen	Datum	Name			

REF_12KW_HFHD_PSU | 1 | A2

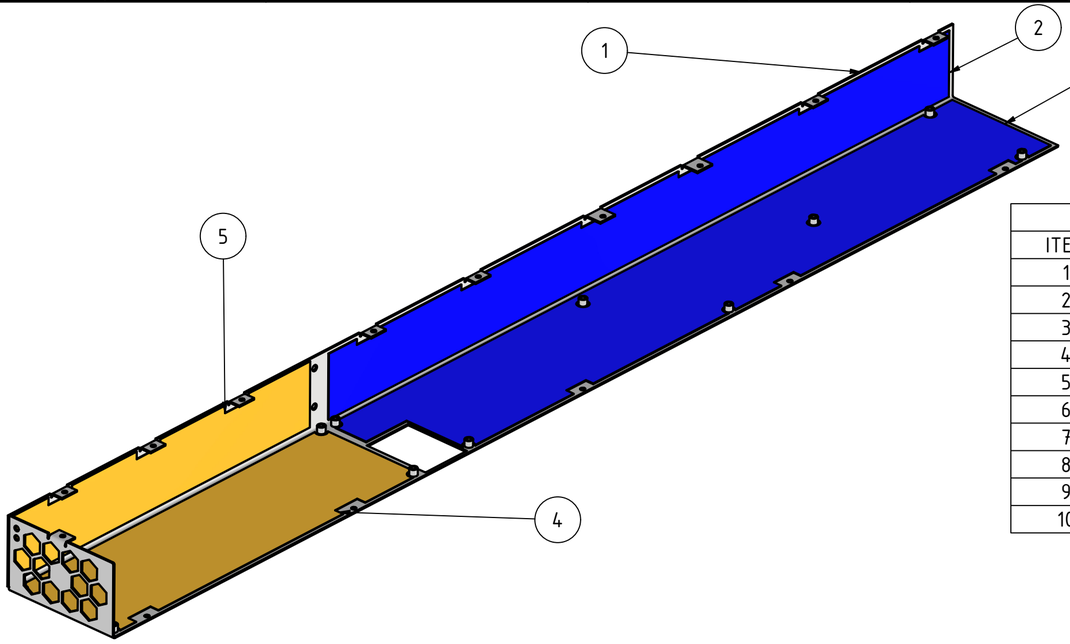

BILL OF MATERIAL		
ITEM	DESIGNATOR	QUANTITY
1	MP100001549	1
2	IS300001548	1
3	IS100001548	1
4	IS400001548	1
5	IS500001548	1
6	HO100001548	1
7	IS600001548	1
8	IS700001548	1
9	IS800001548	1
10	IS200001548	1

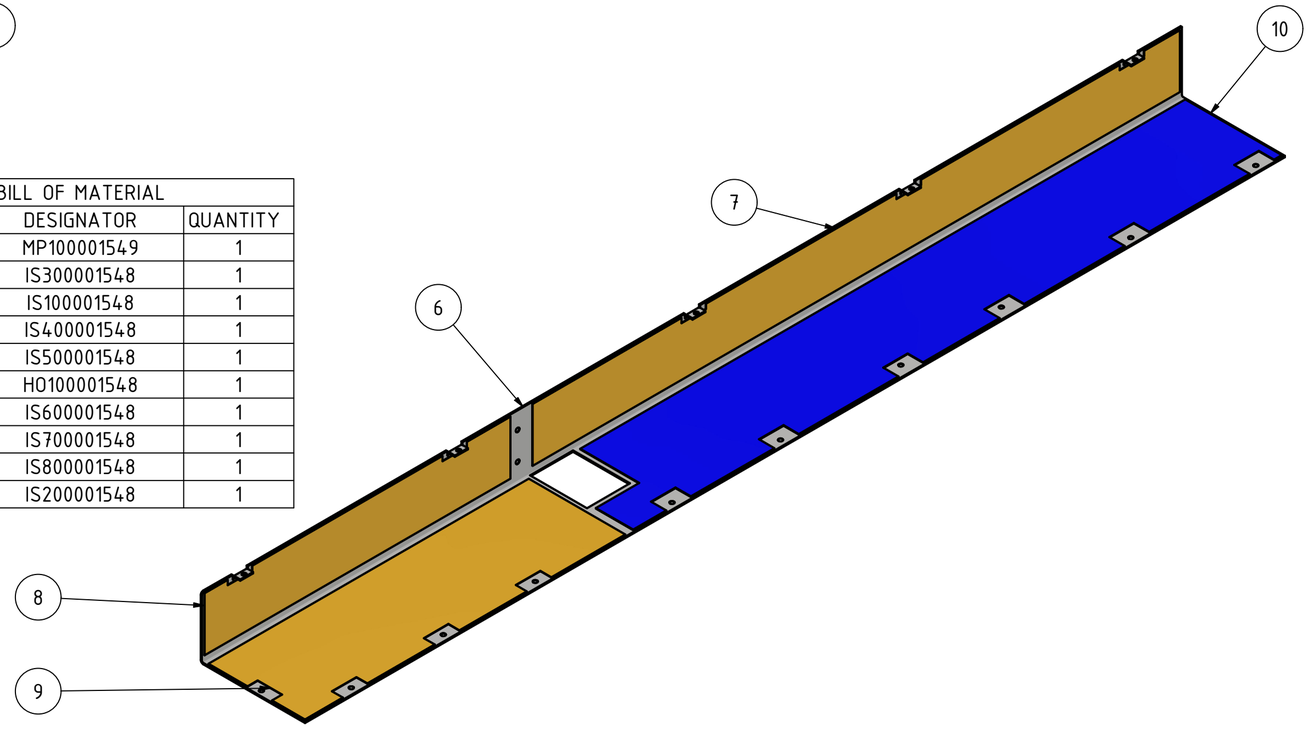

Utilize spray adhesive **RS 136-8536** as per manufacturers directions to install isolation sheets.
Copper side of IS1/2/300001548 must be facing towards the chassis.

	Datum	Name
Gezeich	19.11.2025	Wernegger
Kontroll		
Norm		

REF_12KW_HFHD_PSU

2

A2

Status	Änderungen	Datum	Name

BILL OF MATERIAL		
ITEM	DESIGNATOR	QUANTITY
1	PW200001549	1
2	8032.0205.025 bias transformer	1
3	HT700001547	1
4	TIM700001547	1

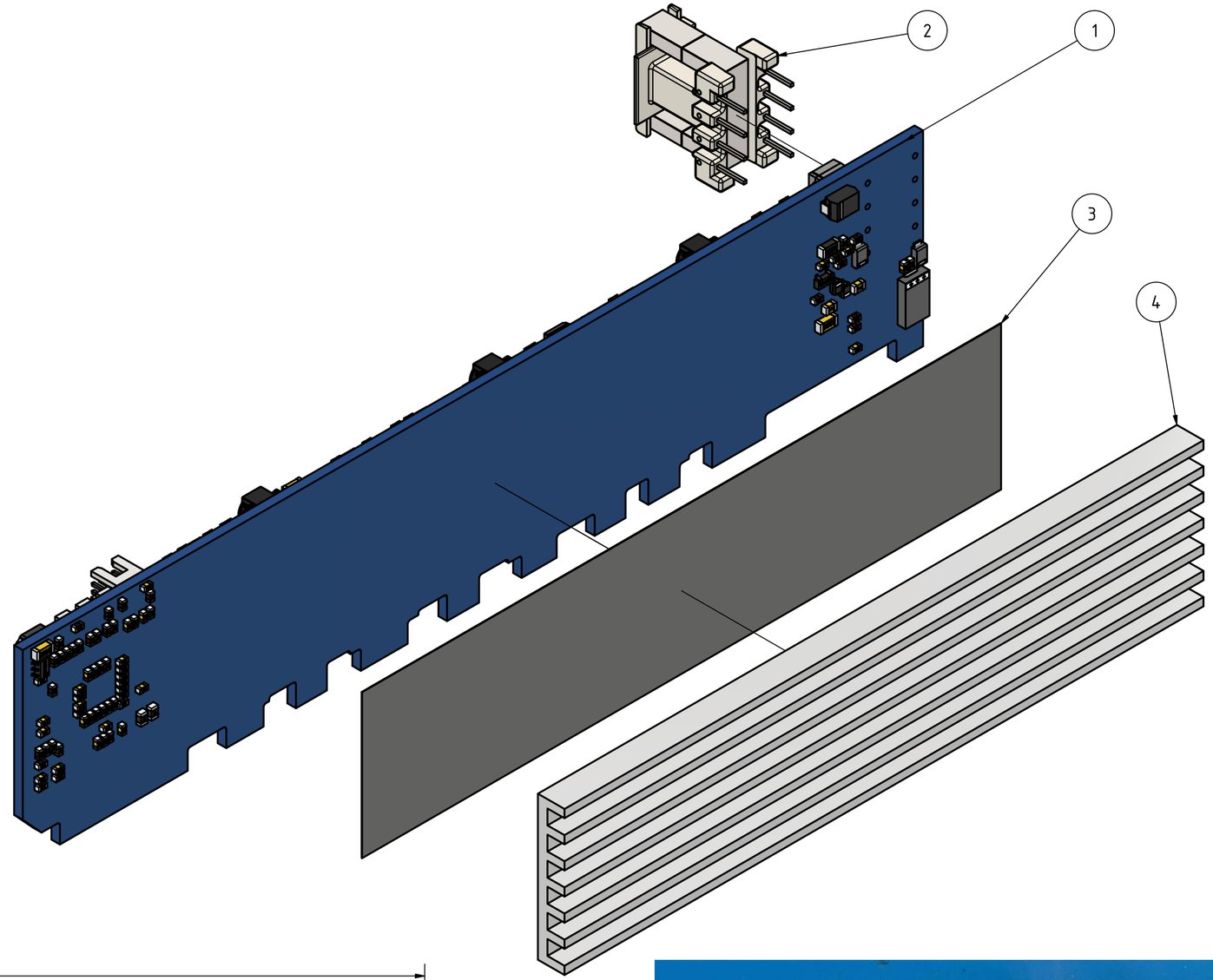

TIM700001547 detail
Material: Bergquist BondPly Thermal Interface Material (TIM)
BERGQUIST BOND PLY TBP 800 0.005in
BPLMS-HD-0.005-00-1212

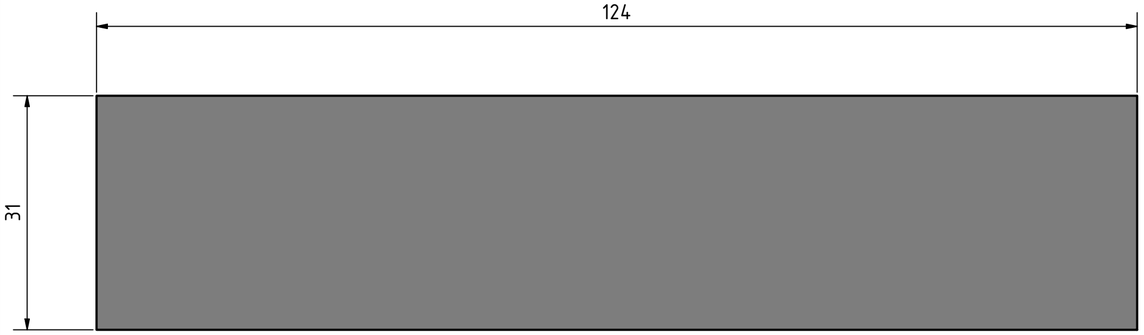



IMPORTANT: Thermal interface material patch dimensions should exceed heatsink dimensions by 2mm per side.
Distribute evenly without overlapping soldering legs contact surface.
Make sure the heatsink is not overlapping/touching neighboring SMD devices.
See right-hand-side picture.

				Datum	Name
			Gezeich	19.11.2025	Wernegger
			Kontroll		
			Norm		
Status	Änderungen	Datum	Name		

REF_12KW_HFHD_PSU | 3 | A2

BILL OF MATERIAL		
ITEM	DESIGNATOR	QUANTITY
1	PW200001549	1
2	TIM800001548	1
3	HT800001547	1

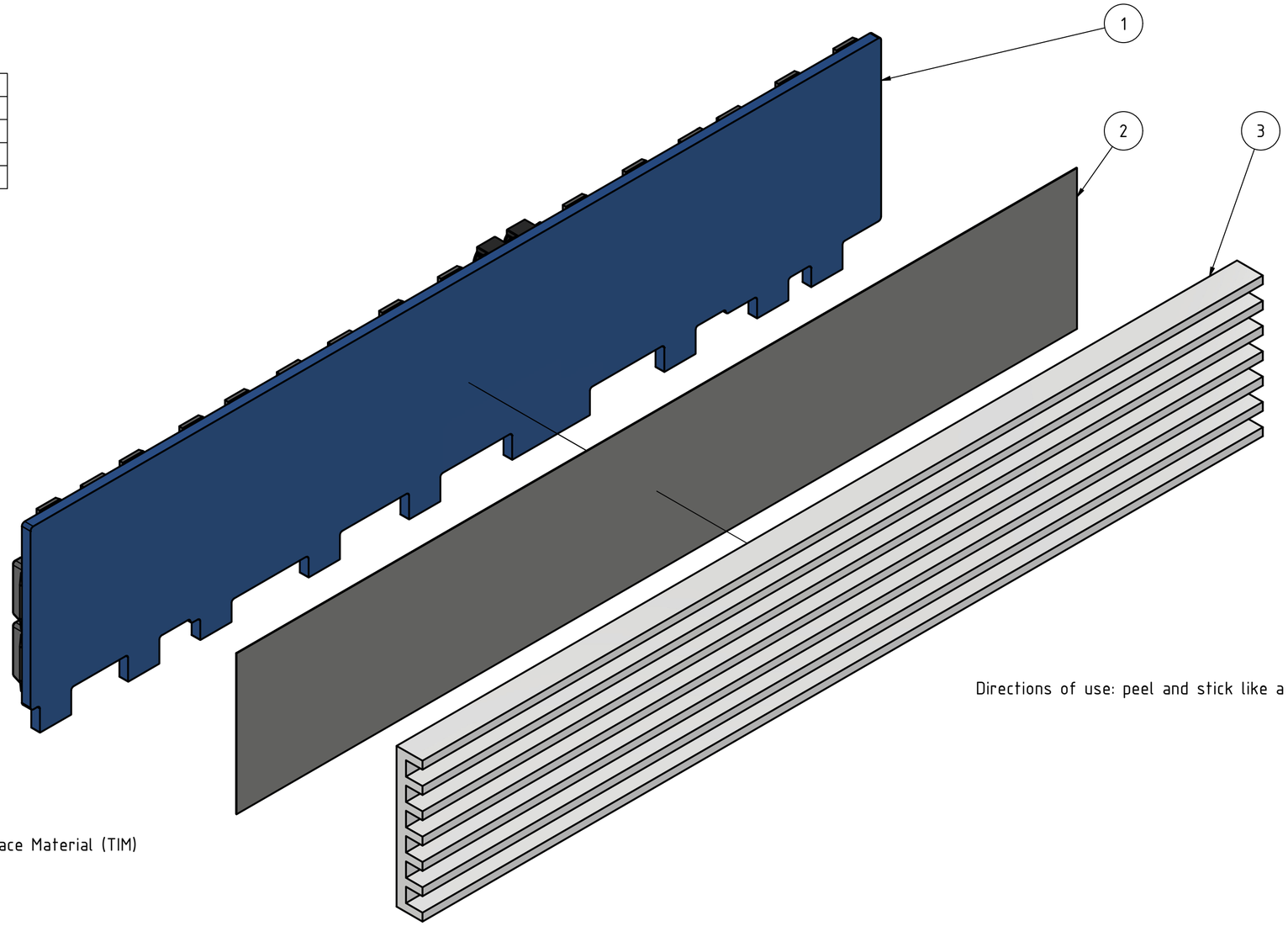

Directions of use: peel and stick like a double-sided adhesive tape.

TIM800001548 detail
Material: Bergquist BondPly Thermal Interface Material (TIM)
BERGQUIST BOND PLY TBP 800 0.005in
BPLMS-HD-0.005-00-1212

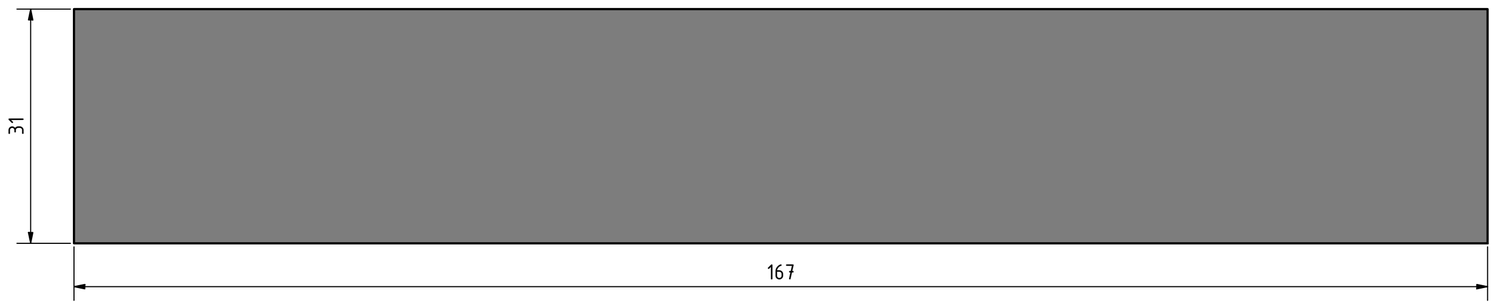

IMPORTANT: Thermal interface material patch dimensions should exceed heatsink dimensions by 2mm per side.
Distribute evenly without overlapping soldering legs contact surface.
Make sure the heatsink is not overlapping/touching neighboring SMD devices.

	Datum	Name
Gezeich	19.11.2025	Wernegger
Kontroll		
Norm		

Status	Änderungen	Datum	Name

REF_12KW_HFHD_PSU

4

A2

Important info for main transformers: Do NOT YET fully solder!
Apply only slight solder joints to GND and 50V terminals.

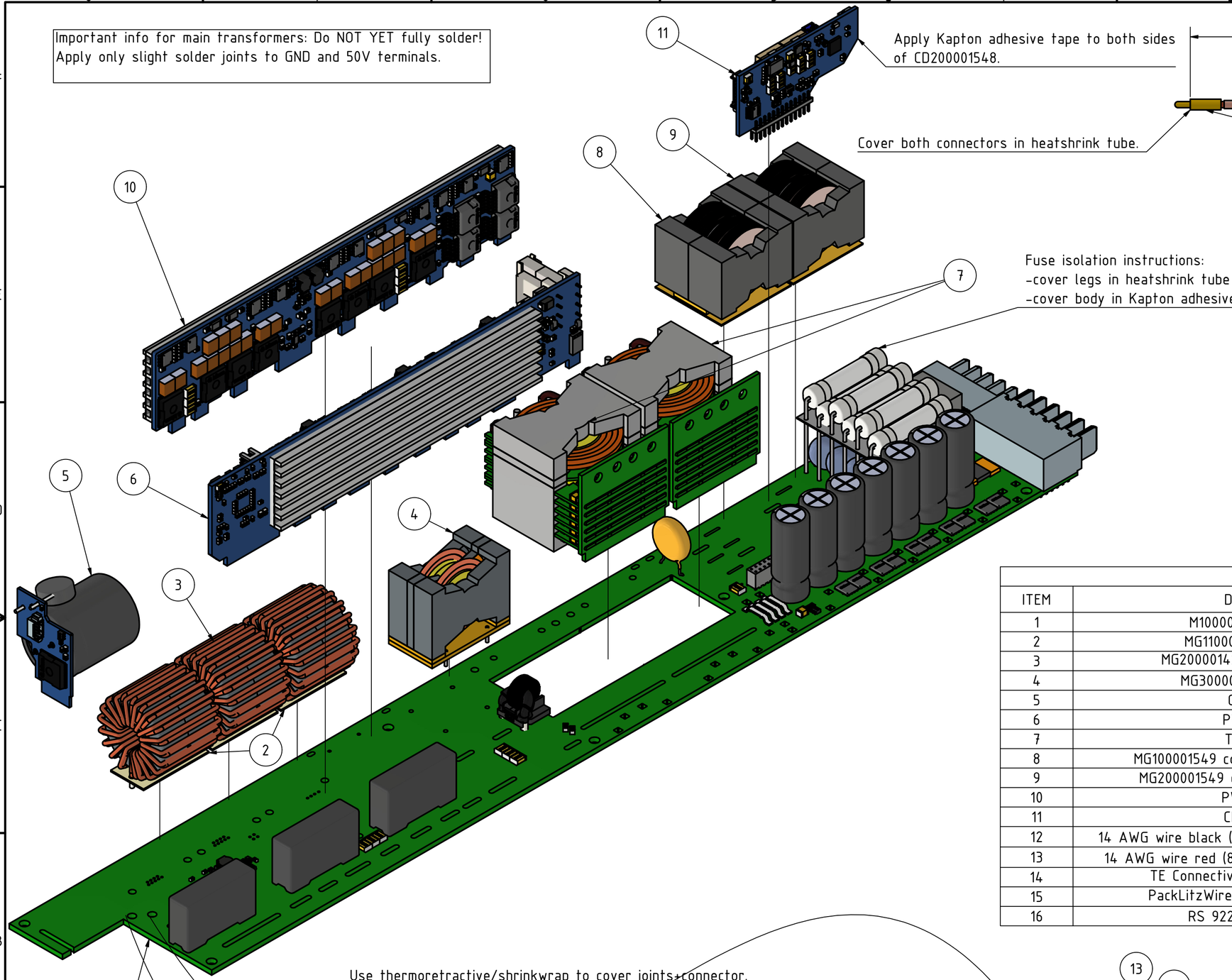

Apply Kapton adhesive tape to both sides of CD200001548.

Cover both connectors in heatshrink tube.

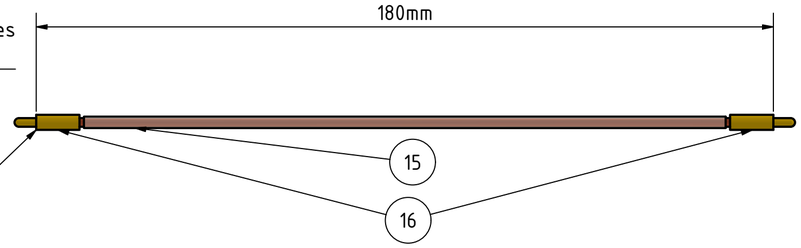

Run jumper wire from HB1 to HB2 on M100001549 as per below picture.

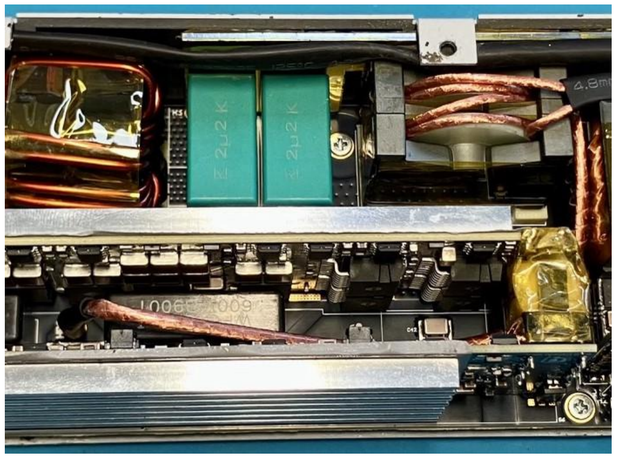

Fuse isolation instructions:
-cover legs in heatshrink tube
-cover body in Kapton adhesive tape.

BILL OF COMPONENTS			
ITEM	DESCRIPTION	QUANTITY	DESIGNATOR ON MAINBOARD
1	M100001549 main board	1	N/A
2	MG110001547 PFC chokes	2	L3 + L4
3	MG200001427 baby boost choke	1	L5
4	MG300001548 external LR	1	L6, wires to L6-1 + L6-2
5	C200001547	1	PCB3
6	PW100001548	1	PCB1
7	TF100001548	2	T1,T2
8	MG100001549 common mode choke 0.5mH	1	L1
9	MG200001549 common mode choke 1mH	1	L2
10	PW200001549	1	PCB2
11	CD200001548	1	X2
12	14 AWG wire black (839-30-03446-DS-ND||DigiKey)	1	PWGND
13	14 AWG wire red (839-30-03445-DS-ND||DigiKey)	1	440V
14	TE Connectivity / AMP 5-160432-7	2	N/A
15	PackLitzWire 1000x0.05 jumper wire	1	HB1 + HB2
16	RS 922-6393 connector	2	HB1 + HB2

Use thermoretractive/shrinkwrap to cover joints+connector.
Do not extend onto cable excessively to avoid difficulties in routing/plugging.

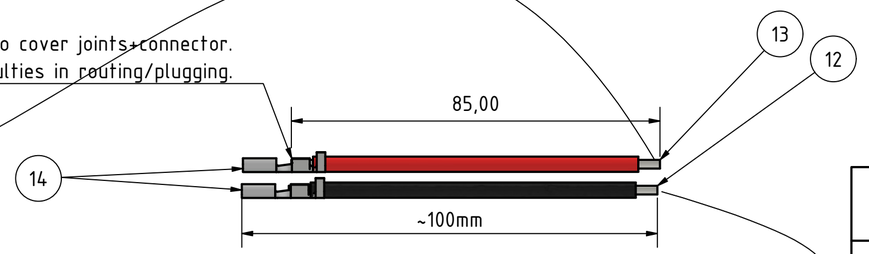

					Datum	Name
				Gezeich	19.11.2025	Wernegger
				Kontroll		
				Norm		
Status	Änderungen	Datum	Name			

REF_12KW_HFHD_PSU | 5 | A2

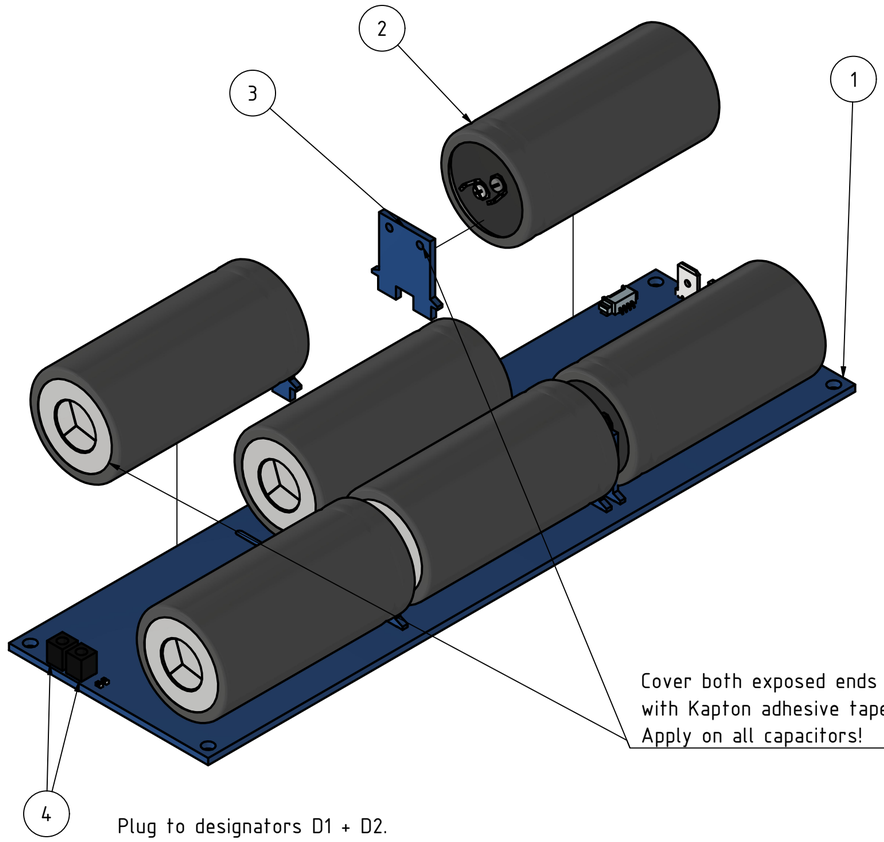

BILL OF COMPONENTS		
ITEM	DESCRIPTION	QUANTITY
1	PW400001549 capacitor board	1
2	B43658A0807M052 SNAP IN 800UF 475V	6
3	C100001548 capacitor adapter board	6
4	BIVAR UHF3-3.500-Y-67 PCB adapter	2

Cover both exposed ends (potruding legs on C100001548+front surface of capacitor)
with Kapton adhesive tape.
Apply on all capacitors!

Plug to designators D1 + D2.
Set light conductive tubes aside for last assembly step.

LED cable instructions

LEDs D1+D2 are supplied from M100001549 via connector J2.
Prepare wire harness MOLEX 0151340401 as follows:

1. lift snap tabs of connector on side to release cables
2. twist wires 180°
3. re-insert wires so that the connector of one side is mirrored to the opposing connector.
4. Plug to J2 on PW400001549

See below picture as a reference (wire harness is a different PN, but the same method applies)

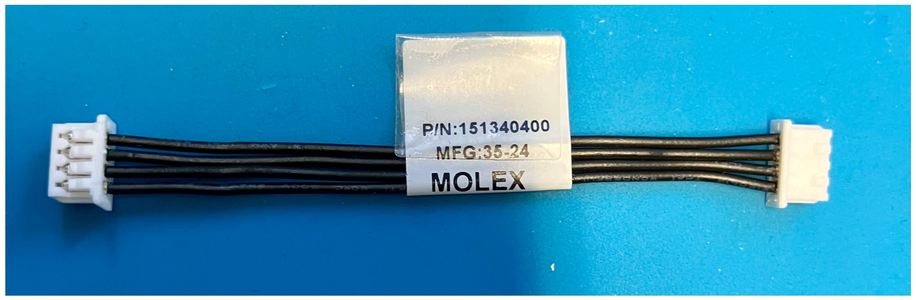

					Datum	Name
				Gezeich	19.11.2025	Wernegger
				Kontroll		
				Norm		

Status	Änderungen	Datum	Name

REF_12KW_HFHD_PSU | 6 | A2

BILL OF COMPONENTS			
ITEM	DESCRIPTION	QUANTITY	DESIGNATOR ON MAINBOARD
1	HT600001548	1	H6
2	HT500001548	1	H5
3	HT300001548	1	H3
4	Stainless steel self-locking nut M3	8	BP200001548 on main transformer
5	Flat Washers 0.5mm*6mmOD ‖ SPWF3 (MISUMI)	8	BP200001548 on main transformer
6	HT400001548	1	H4
7	Brass spacer l = 3mm ‖ 963030042 (Mouser)	4	BP200001548 on main transformer
8	Brass spacer l = 7mm ‖ 963070042 (Mouser)	4	BP200001548 on main transformer
9	HT100001549	1	H1
10	Socket head screws / flat head / hexagon socket / stainless steel 12mm ‖ CBSTBR3-12	4	BP200001548 on main transformer
11	HT200001549	4	H2
12	Socket head screws / flat head / hexagon socket / stainless steel 16mm ‖ CBSTBR3-16	1	BP200001548 on main transformer

Important information:
Start with attaching 9 and 11 to backplane of main transformers.
Carefully tighten fasteners to ensure proper alignment.
Use torque tool finishing at 0.8NM to ensure non-excessive tightening force.
Continue to solder main transformers and busbars 9 + 11 AFTER tightening fasteners.
Align remaining heatsinks/busbars in 90° to M100001549 and finish soldering.

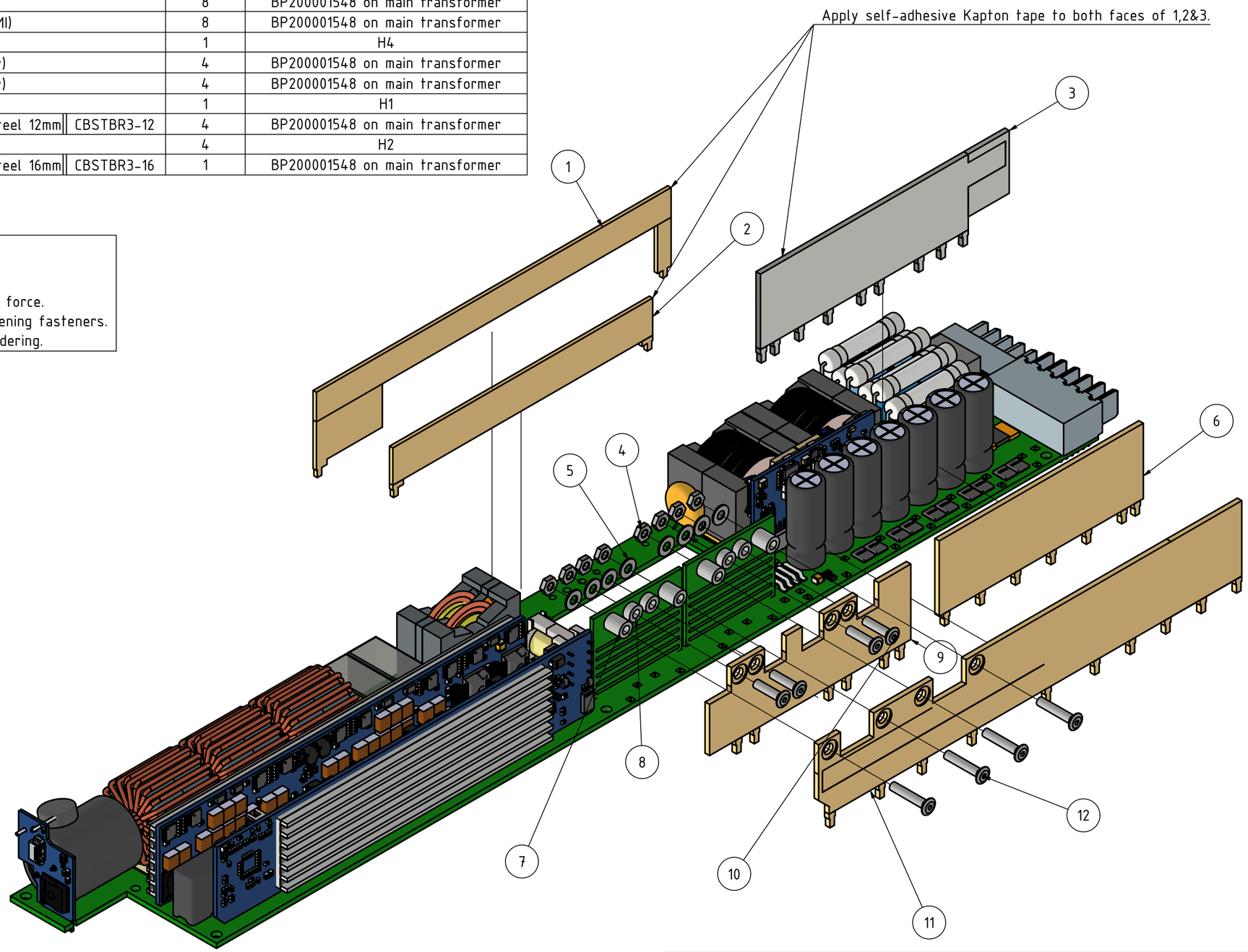

					Datum	Name
				Gezeich	19.11.2025	Wernegger
				Kontroll		
				Norm		
Status	Änderungen	Datum	Name			

REF_12KW_HFHD_PSU

7

A2

BILL OF COMPONENTS		
ITEM	DESCRIPTION	QUANTITY
1	FM100001548	1
2	FA100001548 fan + cable harness	1
3	CSPLC-SUS-M4-10 ‖ (MISUMI)	4

See FA100001548 fan assembly instructions before!

Orientate fan wire harness opposing screw marked with asteriks.

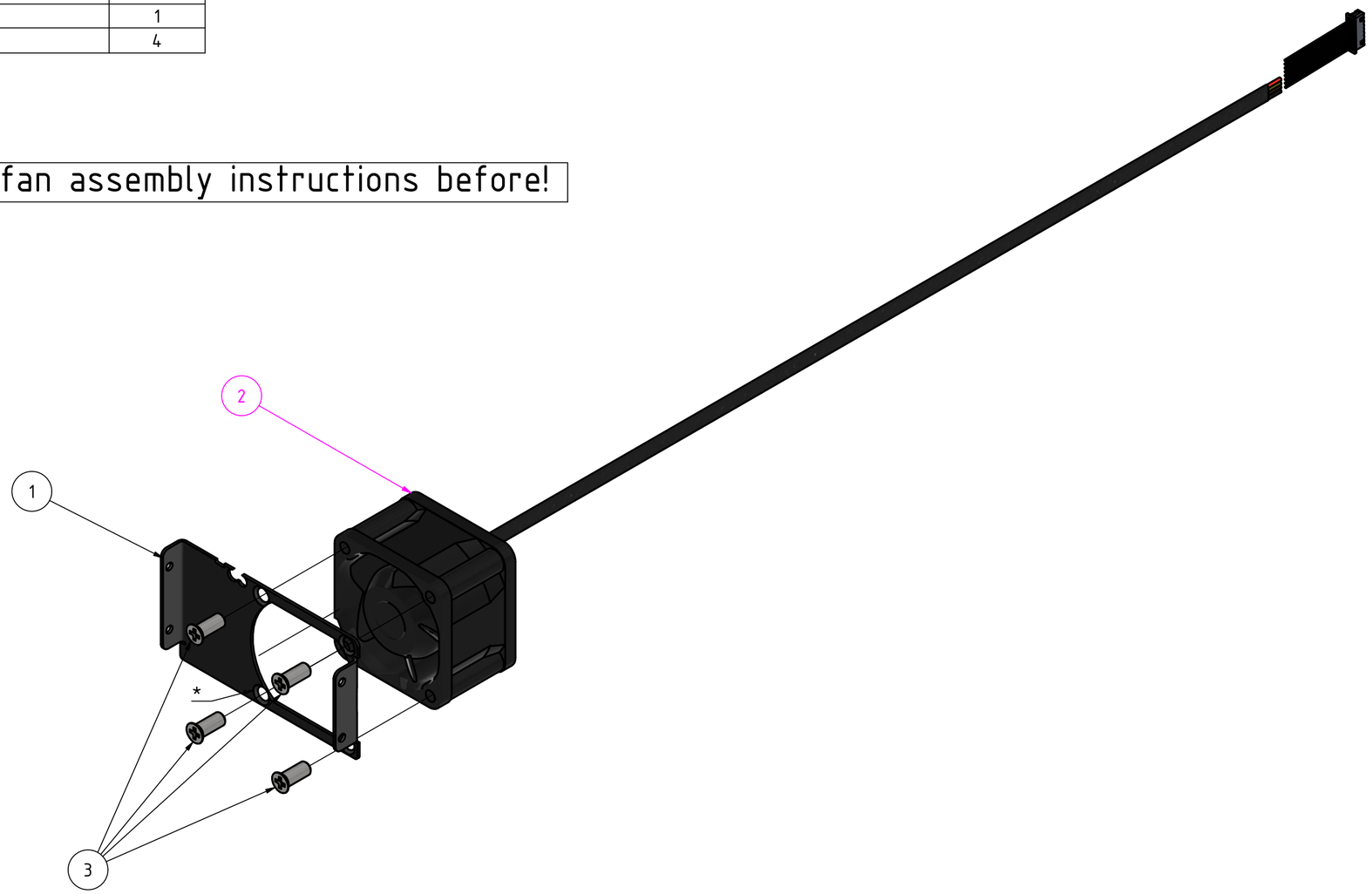

						Datum	Name
					Gezeich	19.11.2025	Wernegger
					Kontroll		
					Norm		
Status	Änderungen	Datum	Name				

REF_12KW_HFHD_PSU

8

A2

Insert e-modules sideways into MP100001548. (1)
Secure with M3x5 button/cylinder head screws. (2)
Plug LED supply cable coming from PW400001549 to J1 on C200001547. (3)

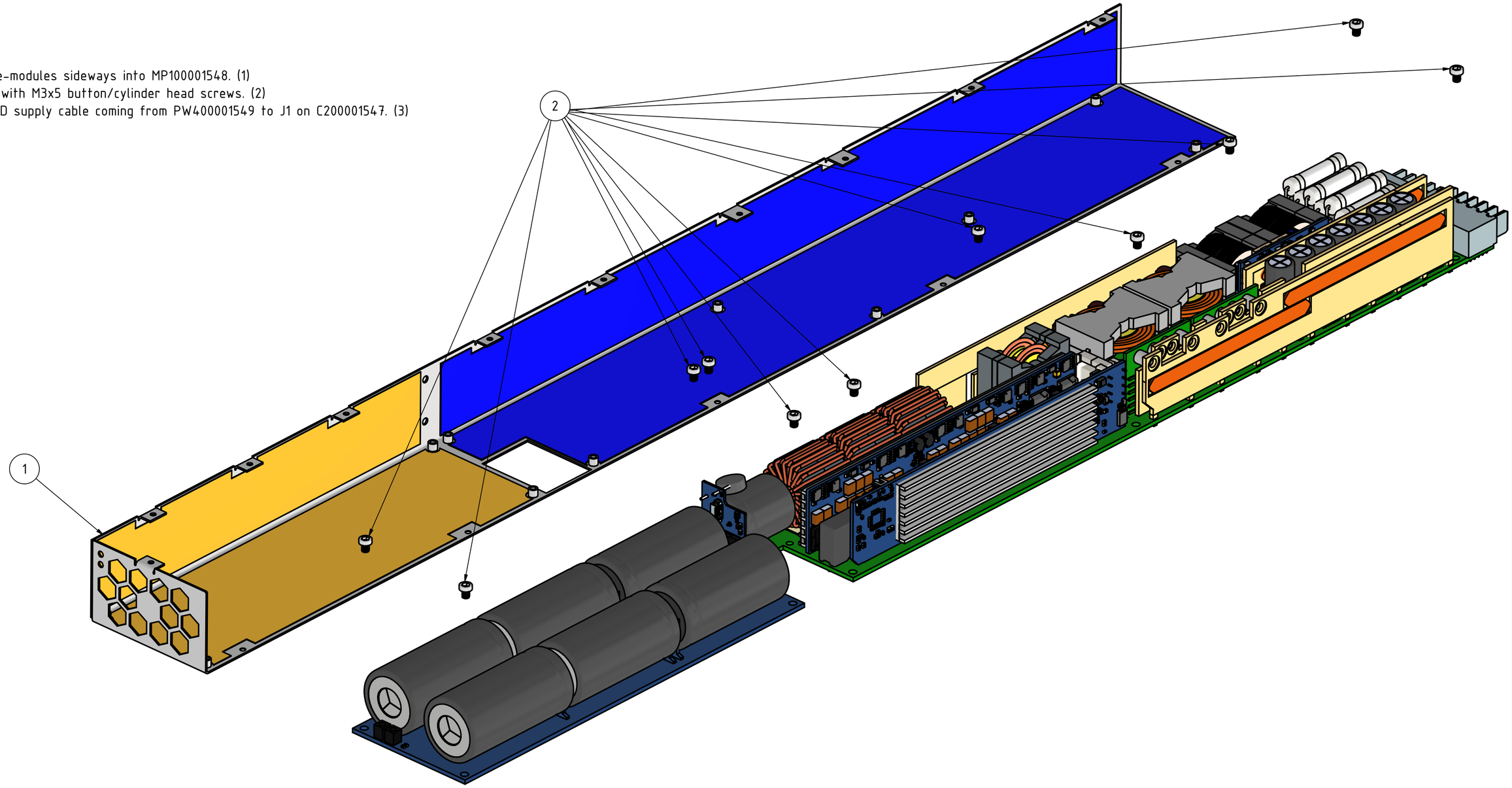

					Datum	Name	
				Gezeich	19.11.2025	Wernegger	
				Kontroll			
				Norm			
							REF_12KW_HFHD_PSU 9
							A2
Status	Änderungen	Datum	Name				

See page 8 for fan assembly.
Not all details pictured for ease of visibility.
Slide fan assembly to slot in between modules. (lift LED supply wire harness)
Thread two M3x3 FHCS screws (not pictured) through back panel of MP100001549.
Do not fully tighten, ensure alignment of fan assembly with cutout in MP100001549.

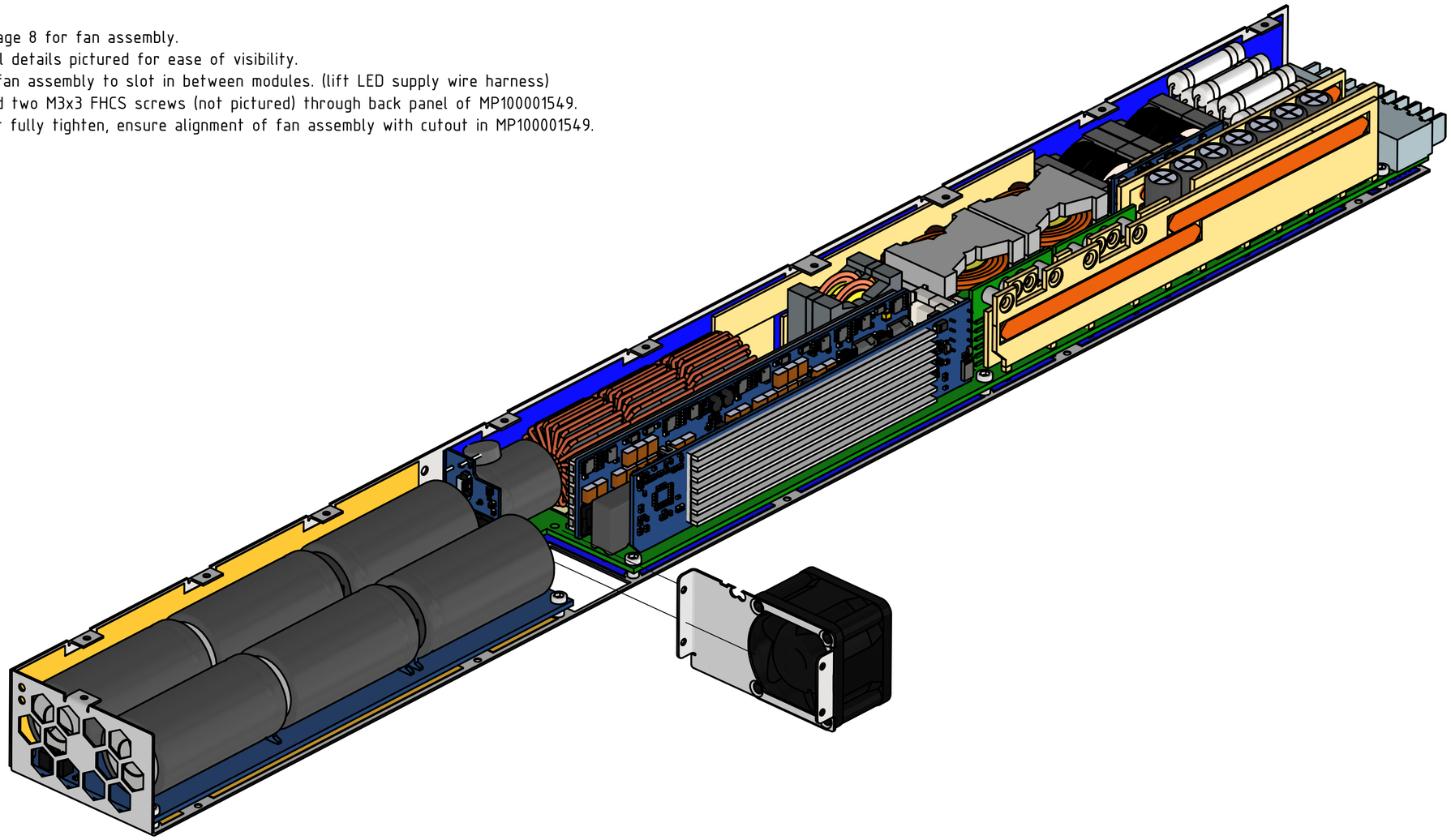

					Datum	Name
				Gezeich	19.11.2025	Wernegger
				Kontroll		
				Norm		
Status	Änderungen	Datum	Name			

REF_12KW_HFHD_PSU

10

A2

Route supply wires from M100001549 to PW400001549 as per the below picture.

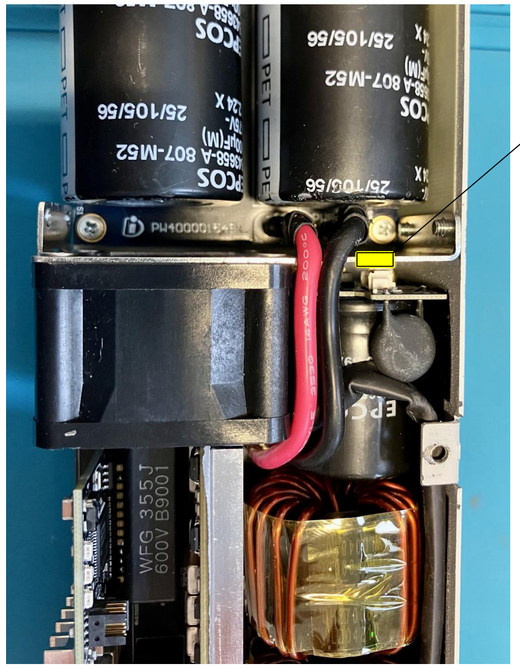

Route LED supply wire harness through cutout on FM100001548 (yellow hatched area).

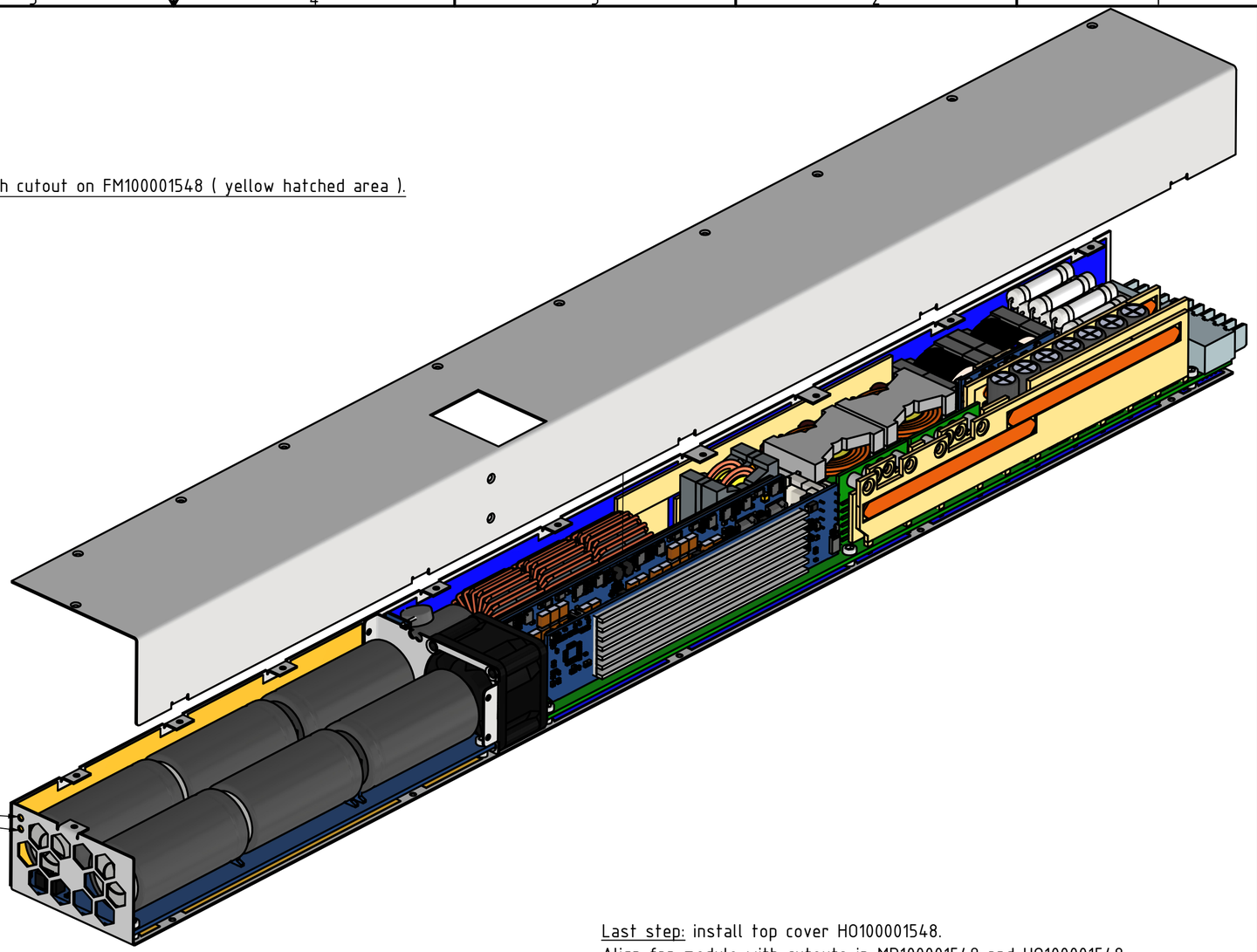

Route light conductive tubes BIVAR UHF3-3.500-Y-67 through chassis holes.
Connect to receptacles on PW400001549.

Route fan wire harness below latches as per the below pictures. Plug to J1 on CD200001548.

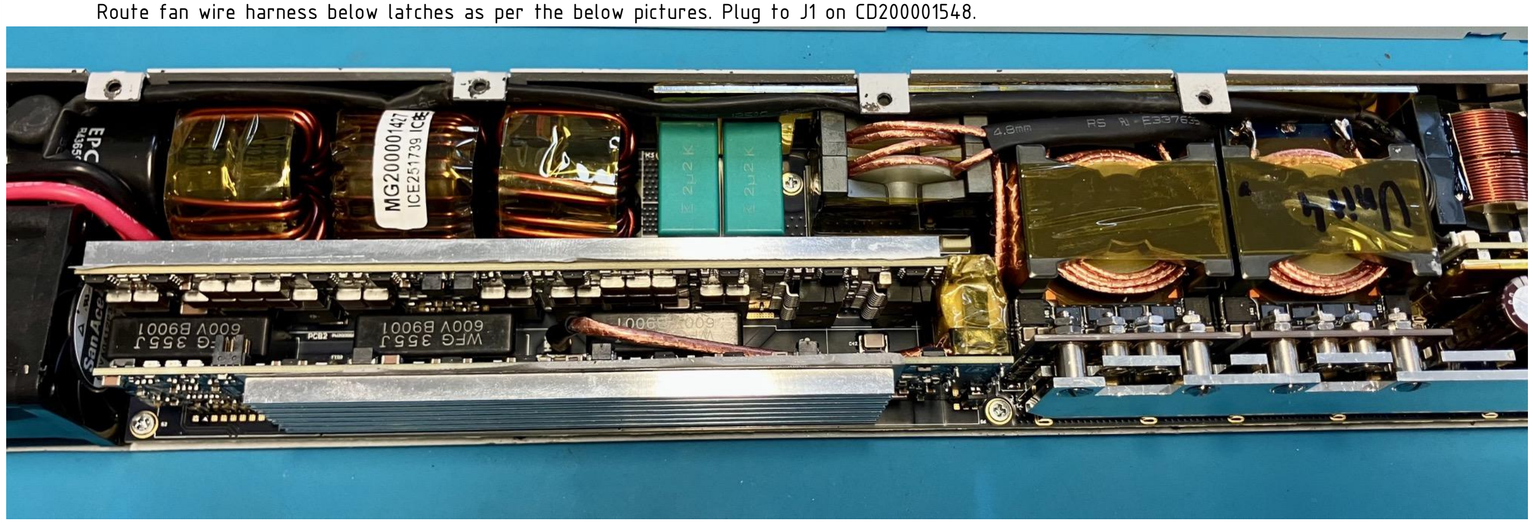

Last step: install top cover HO100001548.
Align fan module with cutouts in MP100001549 and HO100001548.
Tighten all M3x3 FHCS (not pictured).

					Datum	Name
				Gezeich	19.11.2025	Wernegger
				Kontroll		
				Norm		
Status	Änderungen	Datum	Name		REF_12KW_HFHD_PSU	11 A2